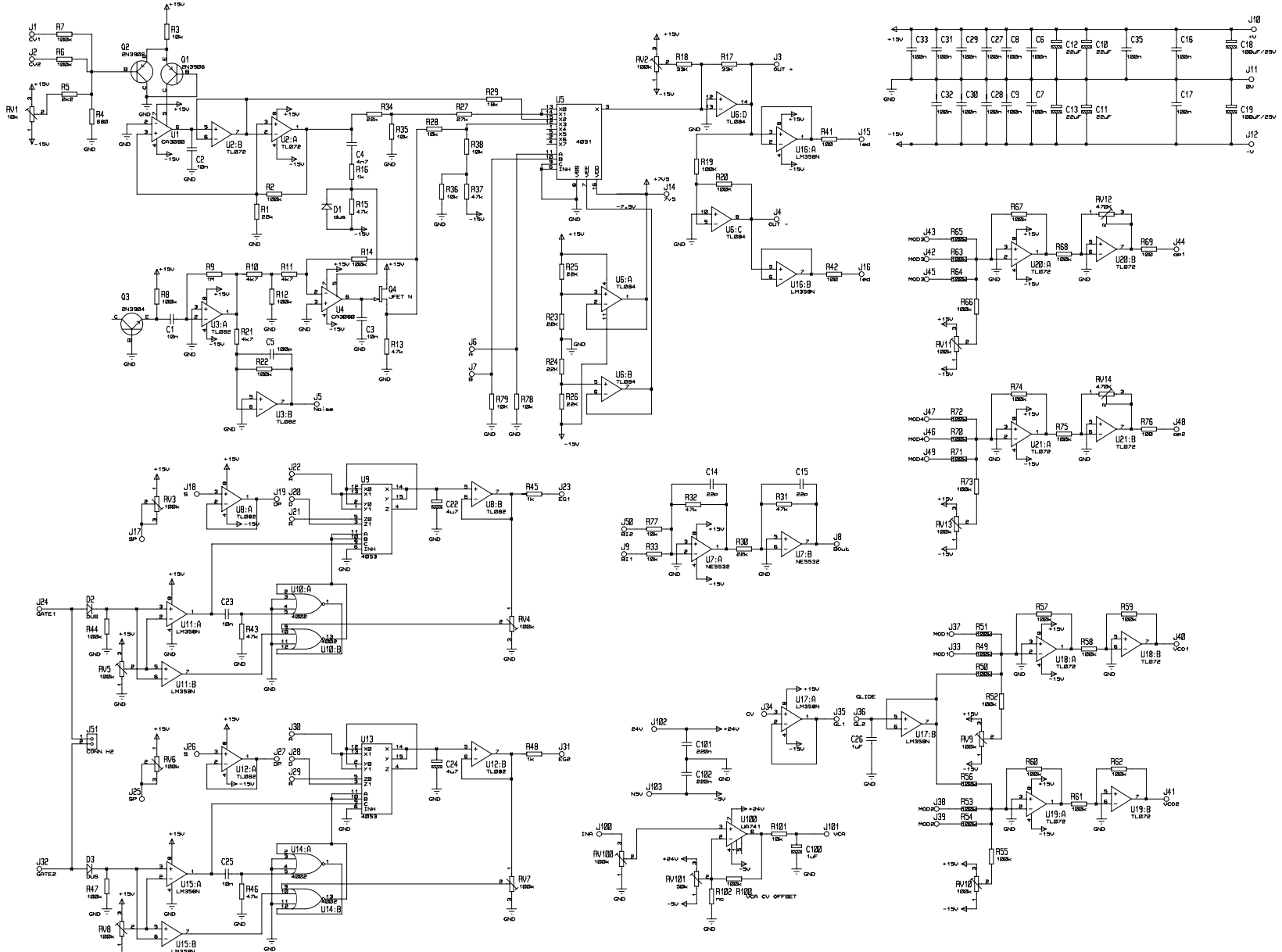
TSYN3 - 2xADSR+LFO+NOISE+GLIDE+BUFFERS